LC Series – 90 Degree Angle Fittings (Zinc Die Cast)

- **90 degree Zinc Die Cast angle fittings** (also available in Nickel Plated Brass and 316 Marine Grade Stainless Steel)
- **Provides maximum protection for electrical installations in Industrial & Commercial environments.**

Product Details:

Temperature range	-	-45°C to + 135°C
Material	-	Zinc die cast
Protection degree	-	IP66/IP67/IP68 Note 1
U.V. Rating	-	U.V. resistant and suitable for outdoor use
Characteristics	-	High tensile strength, oil and corrosion resistant
	-	Multi-part four component fitting
	-	Supplied with nylon insulating throat
Compatibility	-	Interchangeable with all liquid tight conduits made to American (UL360) sizes.
Applications	-	Suitable for threaded and knock out entries.

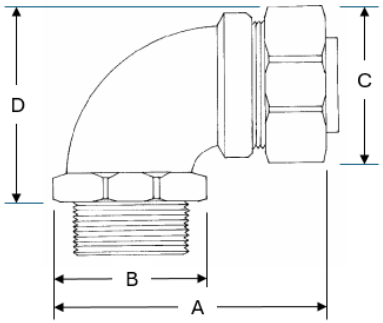



L&C Product Code	Thread Dimensions	Nominal Conduit Size (mm)	Thread Length (mm)	Inside Diameter (mm)	Outside Diameter (mm)	Total Length (mm)	Back Nut Torque Tension Required (Nm) Note 2
LC-16-90	M16 X 1.5	16	12.7	11.0	28.0	55.5	22.6 Nm
LC-16/20-90	M20 X 1.5	16	12.7	14.0	28.0	56.0	22.6 Nm
LC-20-90	M20 X 1.5	20	12.7	13.5	31.5	57.0	33.9 Nm
LC-25-90	M25 X 1.5	25	14.2	18.0	41.0	65.5	56.5 Nm
LC-32-90	M32 X 1.5	32	16.3	24.2	47.0	78.8	79.1 Nm
LC-40-90	M40 X 1.5	40	18.2	32.0	59.0	90.5	113 Nm
LC-50-90	M50 X 1.5	50	18.2	38.5	67.1	97.0	136 Nm
LC-63-90	M63 X 1.5	63	20.0	50.0	81.0	111.5	181 Nm

Notes:

1. *To achieve IP 66/67/68 protection for this fitting, a thread sealing washer or O ring must be installed.*
2. *The back nut, which clamps the flexible conduit to the fitting, must be tightened to the torque tension stated to achieve the IP protection rating of the fitting and prevent water ingress.*

Last Updated: 19/10/2026