LC-SSFG - Food Grade 316L Stainless Steel Straight Fittings (Unpolished)

- **Food Grade 316L (Low Carbon) Stainless Steel straight fittings** (also available with a polished finish)
- **Provides maximum protection for electrical installations in Industrial & Commercial environments**
- **Ideally suited for use in the food industry, marine applications, laboratory equipment, welding environments**

Product Details:

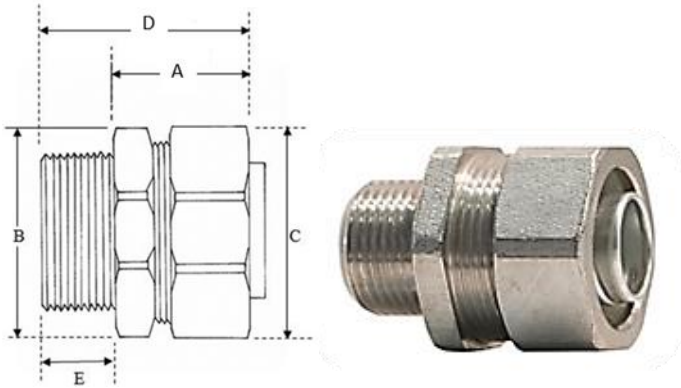

Temperature range	-	-45°C to + 135°C
Material	-	Grade 316L (Low Carbon) Stainless Steel
Finish	-	Unpolished Stainless Steel
Protection degree	-	IP66/IP67/IP68 Note 1
U.V. Rating	-	U.V. resistant and suitable for outdoor use
Characteristics	-	Food Grade fitting
	-	High tensile strength, oil resistant
	-	Rust and corrosion resistant
	-	Highly resistant to sensitisation (grain boundary carbide precipitation)
	-	making it ideal for use in heavy gauge welded components
Installation	-	Multi-part four component fitting supplied with nylon insulating throat
Applications	-	Ideal for use in food environments, marine applications, laboratory equipment, welding environments
	-	The low carbon composition makes it ideal for use in heavy gauge welded components. Suitable for threaded and knock out entries

L&C Product Code	Thread Dimensions	Nominal Conduit Size (mm)	Body Length (A) (mm) Note 3	Flange Width (B) (mm)	Backnut Width (C) (mm)	Total Length (D) (mm) Note 3	Thread Length (E) (mm)	Back Nut Torque Tension Required (Nm) Note 2	Stainless Steel Ferrule (Optional Product) Notes 4 & 5
LC-16-SS	M16 X 1.5	16	23.5	28.5	28.0	36.0	13.0	22.6 Nm	LC-16-SSFL
LC-16/20-SS	M20 X 1.5	16	24.0	28.5	28.0	36.5	13.0	33.9 Nm	LC-16-SSFL
LC-20-SS	M20 X 1.5	20	24.0	31.5	31.5	37.0	13.0	33.9 Nm	LC-20-SSFL
LC-25-SS	M25 X 1.5	25	25.0	38.5	38.5	39.0	14.5	56.5 Nm	LC-25-SSFL
LC-32-SS	M32 X 1.5	32	27.0	45.5	46.5	43.0	16.5	79.1 Nm	LC-32-SSFL

Notes:

1. *To achieve IP 66/67/68 protection for this fitting, a thread sealing washer (L&C Part No: SWS) must be installed. (NB: the SWS is not supplied with this fitting and must be ordered separately if required).*
2. *Correct assembly of all liquid-tight fittings is essential. The back nut must be tightened to the specified torque to ensure the protection rating is achieved and to prevent the ingress of water etc.*
3. *Dimensions A has been measured with the backnut in a non-tensioned (finger tight) state. The stated dimensions will reduce once the backnut is tightened and the stated tension is applied.*
4. *For improved corrosion resistance in harsh environments, an optional 316 grade stainless steel ferrule is available at an additional cost. Refer to above table (last column) for the L&C product code.*
5. *This product is supplied with a zinc-plated steel ferrule, which provides the stated IP protection when the back nut is tightened to the specified torque. Failure to tighten the back nut correctly may allow the ingress of water and other contaminants. For additional protection, the optional 316 stainless steel ferrule can be used (see table above), though proper tightening of the backnut is still required.*

Last Updated: 22/20/2026